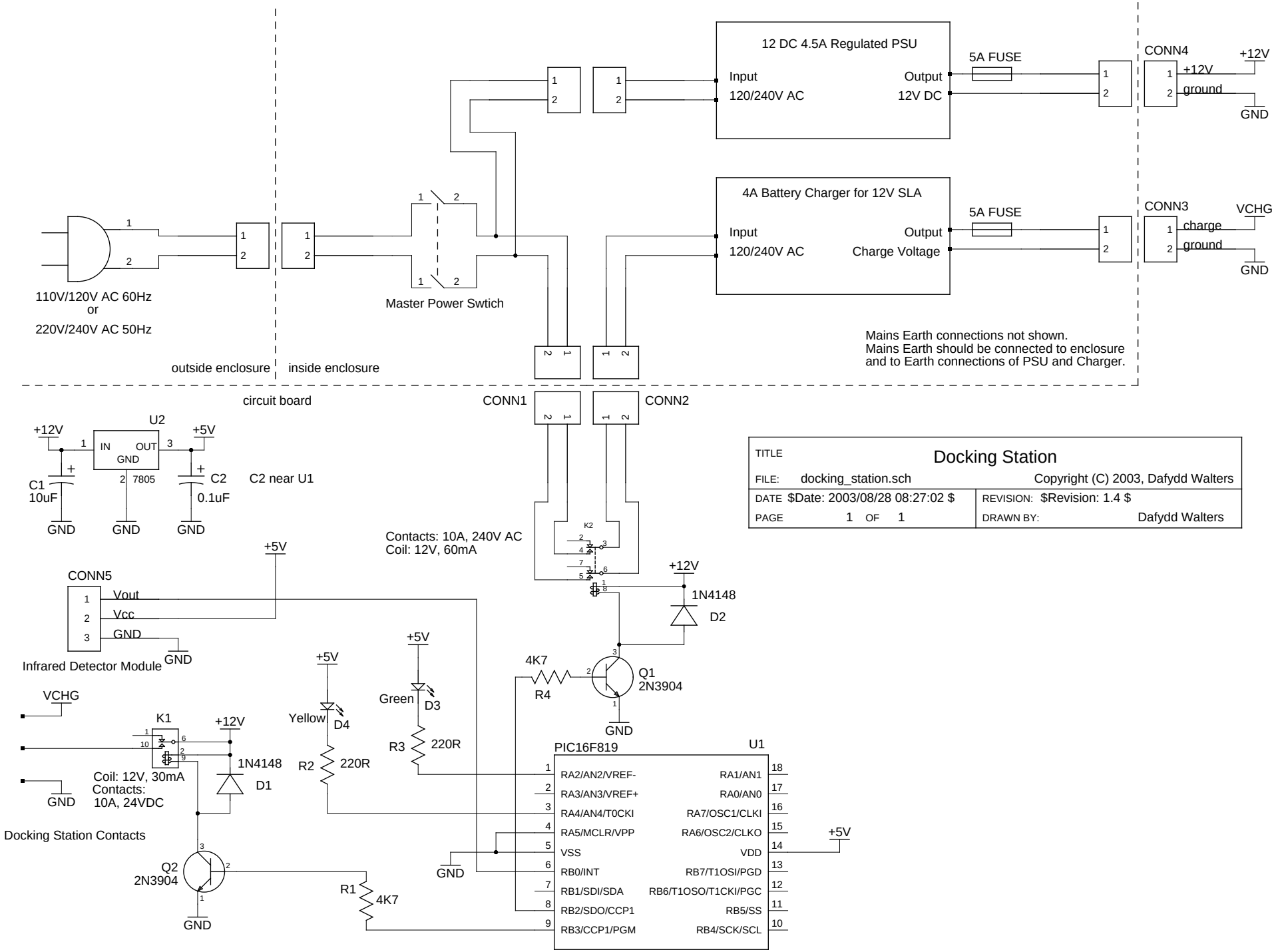
12 DC 4.5A Regulated PSU
Input
120/240V AC
Output
12V DC
5A FUSE
CONN4
+12V
ground
GND
4A Battery Charger for 12V SLA
Input
120/240V AC
Output
Charge Voltage
5A FUSE
CONN3
VCHG
charge
ground
GND
110V/120V AC 60Hz
or
220V/240V AC 50Hz
Master Power Swtich
Mains Earth connections not shown.
Mains Earth should be connected to enclosure
and to Earth connections of PSU and Charger.
outside enclosure
inside enclosure
circuit board
CONN1
CONN2
U2
+12V
+5V
IN
OUT
GND
7805
C1
10uF
C2
0.1uF
C2 near U1
GND
Contacts: 10A, 240V AC
Coil: 12V, 60mA
K2
CONN5
Vout
Vcc
GND
Infrared Detector Module
1N4148
D2
Q1
2N3904
4K7
R4
Green
D3
Yellow
D4
R3
220R
R2
220R
VCHG
K1
Coil: 12V, 30mA
Contacts:
10A, 24VDC
1N4148
D1
Docking Station Contacts
Q2
2N3904
R1
4K7
PIC16F819
U1
RA2/AN2/VREF-
RA3/AN3/VREF+
RA4/AN4/T0CKI
RA5/MCLR/VPP
VSS
RB0/INT
RB1/SDI/SDA
RB2/SDO/CCP1
RB3/CCP1/PGM
RA1/AN1
RA0/AN0
RA7/OSC1/CLKI
RA6/OSC2/CLKO
VDD
RB7/T1OSI/PGD
RB6/T1OSO/T1CKI/PGC
RB5/SS
RB4/SCK/SCL
TITLE
Docking Station
FILE: docking_station.sch
Copyright (C) 2003, Dafydd Walters
DATE $Date: 2003/08/28 08:27:02 $
REVISION: $Revision: 1.4 $
PAGE 1 OF 1
DRAWN BY: Dafydd Walters